IC100 QUICK START GUIDE

Indigo-Clean™

Signal Wires

- **Purpose:** Sends control signal from IC100 to luminaires to switch between white and Indigo-Clean mode.
- **Electric connection:** Connected to IC100 to luminaire using yellow and brown wires.
- **Mode:** 10 VDC = White mode, less than 5VDC = Indigo-Clean mode.
- **Wires:** Customer supplied.

Override Switch

- **Purpose:** Manually locks luminaires in white mode.
- **Electric connection:** Connected to IC100 at any open bay.
- **Mode:** When switch shorts IC100 bay, fixtures will remain in white mode regardless of sensor's occupancy state.
- **Switch:** Customer supplied

Ultrasonic Sensor

- **Purpose:** Sensing Occupancy
- **Electric connection:** 24V power is achieved by connection to IC100 controller
- **Mode:** If sensor detect occupancy, it sends a signal to IC100 controller and Indigo-Clean Luminaire go into white mode. No occupancy detected at all sensors, Indigo-Clean luminaire go into Indigo-Clean mode.
- **Setting:** Sensors have a time delay of up to 30 minutes that will lock the luminaires in white mode after occupancy is detected. Factory setting 30 minutes. Field adjustment at each sensor to reduce delay.
- **Wires:** Customer supplied

0-10V Dimming Wires

- **Purpose:** Dimming signal
- **Electric connection:** Connected to 0-10V Dimmer to luminaire using violet and gray wires.
- **Wires:** customer supplied.

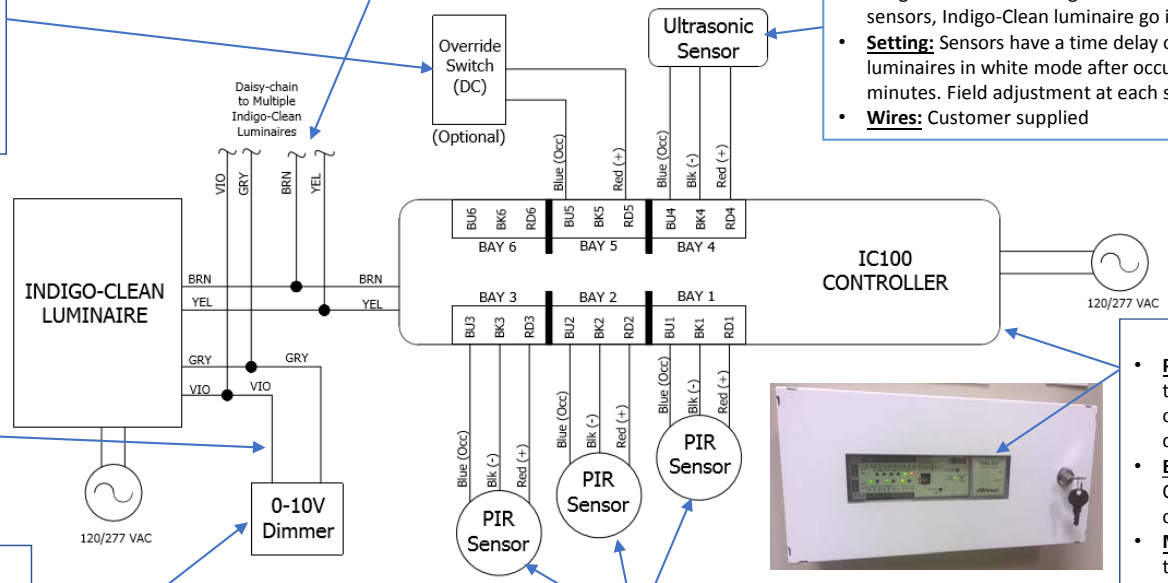

IC100 Controller

- **Purpose:** Provides power to sensors and takes sensor's detection signal along with optional override switch and provides control signal to fixture.
- **Electric connection:** Input - 120/277VAC; Output - 24VDC to all sensors and override switch.
- **Mode:** If one sensor detect occupancy, the IC100 controller sends a signal to the luminaires to go into white mode. No occupancy detected at all sensors, luminaire go into Indigo mode.

0-10V Dimmer

- **Purpose:** Dimming luminaire in white mode or turns fixtures off (Dim to off).
- **Electric connection:** Connected to gray and violet of the luminaires
- **Mode:** Luminaires will still go into full Indigo-Clean mode regardless of dimmer setting.
- **Dimmer:** 0-10V dimmer, (Line voltage not required at dimmer) – Customer supplied

PIR Sensor (Passive Inferred Sensors)

- **Purpose:** Sensing Occupancy
- **Electric connection:** 24V power is achieved by connection to IC100 controller
- **Mode:** If one sensor detect occupancy, it sends a signal to IC100 and Indigo-Clean luminaire go into white mode. No occupancy detected at all sensors, Indigo-Clean luminaire go into Indigo clean mode.
- **Setting:** Sensors have a time delay up to 30 minutes that will lock the luminaires in white mode after occupancy is detected. Factory setting 30 minutes. Field adjustment at each sensor to reduce delay.
- **Wiring:** Customer supplied

KENALL®

www.kenall.com P: 800-4-Kenall F: 262-891-9701 10200 55th Street Kenosha, Wisconsin 53144

When you see this image, you will know the Kenall product shown or described is designed and manufactured in the USA with components purchased from US suppliers, and meets the Buy American requirements under the ARRA. Kenall has not determined the origin of its domestically purchased components or the subcomponents thereof. May be covered by patents found at www.kenall.com/patents. Content of specification sheets is subject to change; please consult www.kenall.com for current product details. © 2015 Kenall Mfg. Co. All rights reserved.